Issue F

Charnwood DX20i MKI

1st April 2003

Parts List

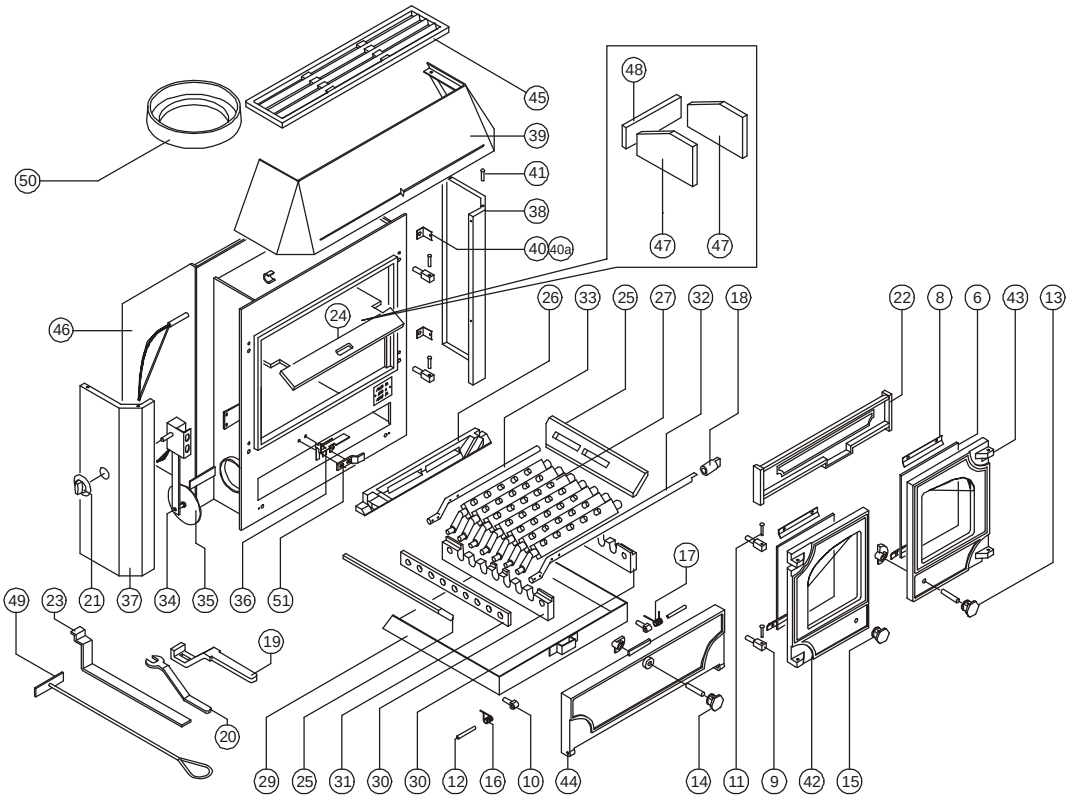

Item	Part No.	Description
1*	008/EW35L	L.H. Door Seal
2*	008/EW35R	R.H. Door Seal
3*	008/EW36	Ashpit Door Seal
4*	008/EW35S	Door Seal Set Inc Adhesive
5*	008/FW29	Door Seal Adhesive
6	006/FW30	Glass (inc. Glass Channel)
7*	008/EW44/S	Glass Channel (Set Of 8)
8	004/EW23	Glazing Bar
9	008/FW27	Hinge Post
10	008/FW28	Hinge Post
11	008/BW39/S	Hinge Pin Set (4 per set)
12	008/BW40/S	Hinge Pin A/P Door Set
13	008/BW41/A	Door Catch Assembly R.H.
14	008/BW42/A	Door Catch Assembly Ashpit
15	002/BW12	Door Knob L.H.
16	008/BW43L	Ashpit Door Spring L.H.
17	008/BW43R	Ashpit Door Spring R.H.
18	002/CG06	Riddler Knob
19	002/BW20	Riddler/Ashpan Tool
20	002/BW26	Door Opening Tool
21	008/BW50	Thermostat Knob
22	002/FW07	Front Firebar
23	008/FW33	Throatplate Tool
24	002/HW31	Throat Plate
25	002/HW15	Side Fire Plate
26	002/HW16	Back Fire Plate
27	002/CG01	Bottom Grate Bar
28	002/CG01S7	Set Of Grate Bars (7per set)
29	004/EW17	Ashpan
30	002/HW30	Carrier Bar
31	012/HW33	Mover Bar
32	012/FW14	Riddler Rod
33	012/CG05	Idler Rod
34	008/BW49	Thermostat C/W Flap
35	008/BW57	Thermostat Flap 90mm dia

Item	Part No.	Description
36	004/BW46	Over Run Catch
37	005/WW05L#	Side Panel L.H.
38	005/WW05R#	Side Panel R.H.
39	005/WW06#	Hood Panel
40	004/WW13	Panel Fixing Bracket
40a	012/WW30	Hood & Panel Fixing Kit
41	008/WW14S	Hood Fixing Pin Set (4)
42	003/EW01#	Door L.H.
43	003/EW02#	Door R.H.
44	003/FW03#	Ashpit Door
45	003/FW04#	Top Grid
46	001/YW10	Firebox (DX20i)
47	011/HW08	Firebrick Side
48	011/HW09	Firebrick Rear
49	012/FW34	Scraper Tool
50	002/FW49	Cast Iron Flue Adaptor (Opt'l Extra)
51	012/BW45	Ashpit Door Bracket
52*	010/EW51	Ash Carrier (Optional Extra)

* These items are not shown on the drawing.
\# Please specify colour when ordering.

To obtain spare parts please contact your local stockist giving Model, Part No. and Description. In case of difficulty contact the manufacturer at the address shown.
This drawing is for identification purposes only.

CHARNWOOD
A. J. WELLS & SONS

CHARNWOOD Bishops Way, Newport, Isle of Wight PO30 5WS, United Kingdom
T:+44 (0)1983 537777 F:+44 (0)1983 537788 charnwood@ajwells.co.uk www.charnwood.com